DWG 36215-50

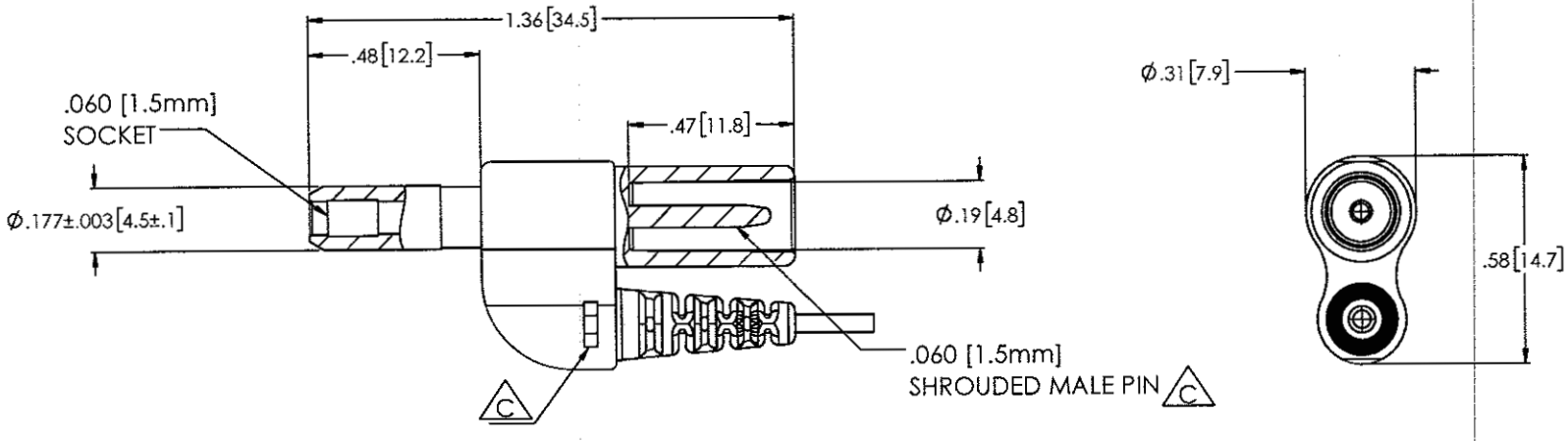

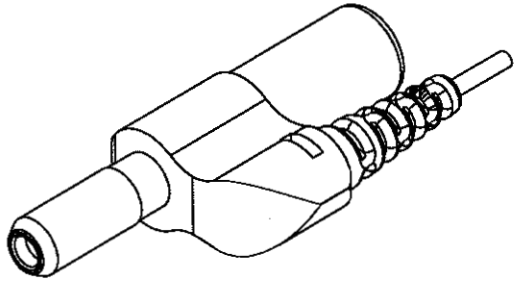

REF: DIN 42 802

REV	DESCRIPTION	DATE	BY
C	REV PER ECO 39376, NPG, 8/16/22	8/31/22	NPG
B	REV PER ECO 16275, WDS, 9/1/11	9/16/11	TVB
A	REL PER ECO 943, BB, 12/12/94	12/19/94	LL

REVISIONS

THIS DRAWING CONTAINS CONFIDENTIAL AND PROPRIETARY INFORMATION AND MAY NOT BE ISSUED OR REPRODUCED, IN WHOLE, OR IN PART, WITHOUT THE EXPRESS WRITTEN PERMISSION OF P1 TECHNOLOGIES, INC.

TOLERANCES
UNLESS OTHERWISE SPECIFIED
ALL DIMENSIONS IN INCHES
DIMENSIONS IN [ ] METRIC

FRACTIONAL
±1/64

DECIMAL
.00 ±.01 [.25mm]
.000 ±.005 [.127mm]

ANGULAR
±.5°

APPROVALS		DATE
DRAWN	BRINDLE	12/28/92
CHECKED		8/16/22
PROJ ENGR		
APPROVED		8/16/22
PROJECT	1331	FSCM

P1 Technologies
BECAUSE EVERYTHING CONNECTS
6591 Merriman Road, Roanoke, VA 24018
Phone: 540-772-7950 Fax: 540-989-7519

TITLE CONNECTOR, 455, 1.5mm, TOUCHPROOF

SCALE 2:1

SIZE	DWG	REV	SHT
A	36215-50	C	1 OF 1